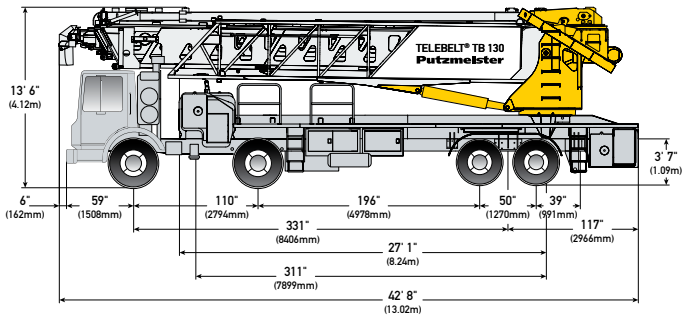

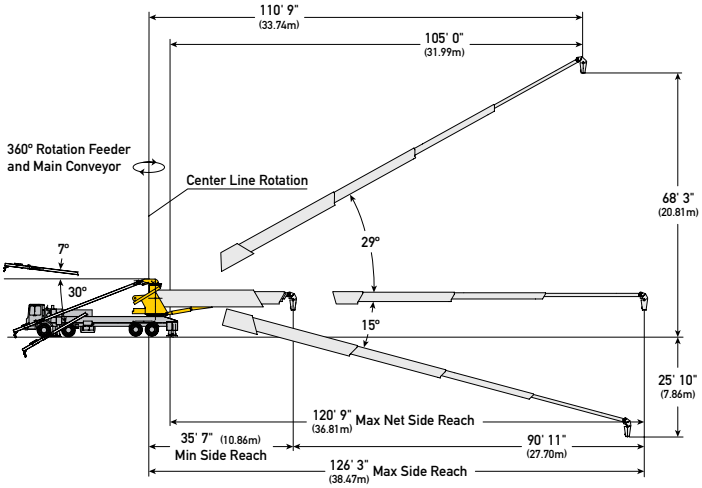

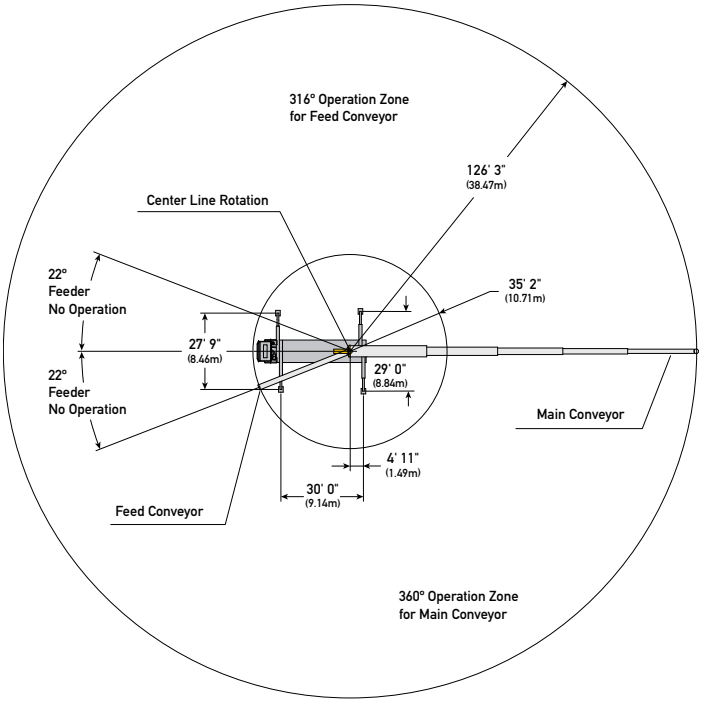

TELEBELT TB 130 SPECIFICATIONS

Conveyors

Conveyor horizontal reach		
Maximum at 0°	126' 3"	(38.47m)
Maximum at 29°	110' 9"	(33.74m)
Conveyor belt width	18"	(457mm)
Feed conveyor length	38' 0"	(11.60m)
Feed conveyor belt width	18"	(457mm)
Trunk/end hose length	15' 0"	(4.57m)
Discharge height from grade		
Maximum at 30°	68' 3"	(20.81m)
Maximum at -15°	-25' 10"	(-7.86m)
Main & feed conveyors		
Observed capacity at 0°	5.00 yd^3/min	(4.00m^3/min)
Observed capacity at 20°	5.00 yd^3/min	(4.00m^3/min)

Outriggers

Net reach beyond outriggers —		
at 0°	120' 9"	(36.81m)
at 29°	105' 0"	(31.99m)
Outrigger spread L - R — front hydraulic extended out/down	27' 9"	(8.46m)
Outrigger spread L - R — rear hydraulic extended out/down	29' 0"	(8.84m)
Outrigger spread front to rear	30' 0"	(9.14m)

General Specifications

Water tank capacity	170 gal	(644L)
Hydraulic oil tank capacity with cooler	130 gal	(492L)

Truck Specifications *•+

Weight	22,320 lbs	(10,124kg)
Engine horsepower	405 hp	(302kW)
Wheelbase	331"	(8,407mm)
Cab height	104"	(2,642mm)
Steering radius (outside)	45' 6"	(13.87m)
Steering angle	38°	
Fuel tank capacity	80 gal	(303L)
Transmission	Mack T309 9-Speed	

Transport Axle Weights *•+

Steering	34,983 lbs	(15,866kg)
Tandem	43,308 lbs	(19,642kg)
Total	78,292 lbs	(35,508kg)

Maximum theoretical values listed.
* Truck dimensions will vary with different truck makes, models and specifications.
• Weights are approximate and include truck, fuel, and 100 gal (379L) of water.
+ All specifications apply to units mounted on Mack MRU 613.

Photos and drawings are for illustrative purposes only.

Authorized Distributor

QUALITY SYSTEM CERTIFIED ISO 9001:2008

Putzmeister

Putzmeister America, Inc.
1733 90th Street
Sturtevant, WI 53177 USA
Phone (262) 886-3200
Toll-free (800) 884-7210
Fax (262) 884-6338
PutzmeisterAmerica.com
pmr@putzam.com

BT 4653 US

MIX Paper FSC FSC® C006660

© Putzmeister America, Inc. 2016

Printed in the USA (2.51601)